Article DOI: https://doi.org/10.37284/ijfa.5.1.5372

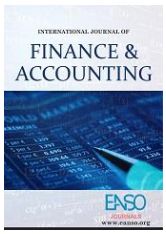

International Journal of Finance and Accounting
ijfa.eanso.org
Volume 5, Issue 1, 2026
Print ISSN: 2790-9581 | Online ISSN: 2790-959X
Title DOI: https://doi.org/10.37284/2790-959X

EAST AFRICAN NATURE & SCIENCE ORGANISATION

Original Article

Credit Risk Identification and Loan Portfolio Quality in Uganda's Commercial Banking Sector: The Moderating Effect of Adverse Selection

Martin Kasenge[1,2*], *Turyahebwa Abanis*[1], *Byamukama Mpora Eliab*[1] & *Ssemaluulu Paul Mukasa*[1]

[1] Kabale University, P. O. Box 317, Kabale, Uganda.
[2] Uganda Martyrs University, P. O. Box 5498, Kampala, Uganda.
[*] Author for Correspondence ORCID ID; https://orcid.org/0009-0004-9750-894X; Email: mkasenge@umu.ac.ug

Article DOI: https://doi.org/10.37284/ijfa.5.1.5372

Date Published: *18 July 2026*

Keywords:

Credit Risk Identification, Loan Portfolio Quality, Adverse Selection, pragmatic philosophy, Commercial Banks.

ABSTRACT

The study examines the moderating effect of credit risk identification and profiling on loan portfolio quality in Uganda's Commercial Banking Sector by focusing on a survey of selected banks. Guided by a pragmatic philosophy blending both qualitative and quantitative approaches, the study adopted a cross-sectional survey design on a sample of 207 participants drawn from a population of 427 across 12 departments within 7 commercial banks. Quantitative data were sought using a self–administered questionnaire from 204 participants, while qualitative data were collected using an interview guide from 3 key informants. Quantitative data were processed using SPSS (Version 25) and exported to JASP version 0.19.30 software to perform factor analysis and run Structural Equation Models (SEM). Data analysis was done using SEM regression for the direct relations, while Hierarchical Moderated Multiple Regression analysis was employed to examine the moderating effect of adverse selection on credit risk identification and loan portfolio quality. Study findings indicate that Credit risk identification significantly predicted loan portfolio quality before and after moderation with adverse selection. In particular, CRI showed a prediction power of $\beta = 0.271$, $p<0.05$ before moderation with adverse selection. Upon moderation, results indicate that adverse selection significantly moderated the effect of Credit risk identification and profiling on loan portfolio quality in commercial banks with interaction terms of CRI×ADS = -0.353, $p<0.01$. The study concludes that Credit risk identification and profiling significantly predicted loan portfolio quality and that adverse selection significantly moderates the effect of credit risk identification on loan portfolio quality. The study recommends that commercial banks should intensify efforts and tactics employed in underwriting loans, especially at the inception of the loan process.

APA CITATION

Kasenge, M., Abanis, T., Eliab, B. M. & Mukasa, S. P. (2026). Credit Risk Identification and Loan Portfolio Quality in Uganda's Commercial Banking Sector: The Moderating Effect of Adverse Selection. *International Journal of Finance and Accounting*, *5*(1), 358-373. https://doi.org/10.37284/ijfa.5.1.5372

 This work is licensed under a Creative Commons Attribution 4.0 International License.

Article DOI: https://doi.org/10.37284/ijfa.5.1.5372

CHICAGO CITATION

Kasenge, Martin, Turyahebwa Abanis, Byamukama Mpora Eliab and Ssemaluulu Paul Mukasa. 2026. "Credit Risk Identification and Loan Portfolio Quality in Uganda's Commercial Banking Sector: The Moderating Effect of Adverse Selection". *International Journal of Finance and Accounting* 5 (1), 358-373. https://doi.org/10.37284/ijfa.5.1.5372

HARVARD CITATION

Kasenge, M., Abanis, T., Eliab, B. M. & Mukasa, S. P. (2026), "Credit Risk Identification and Loan Portfolio Quality in Uganda's Commercial Banking Sector: The Moderating Effect of Adverse Selection", *International Journal of Finance and Accounting*, 5(1), pp. 358-373. doi: 10.37284/ijfa.5.1.5372.

IEEE CITATION

M., Kasenge, T., Abanis, B. M., Eliab & S. P., Mukasa, "Credit Risk Identification and Loan Portfolio Quality in Uganda's Commercial Banking Sector: The Moderating Effect of Adverse Selection", *IJFA*, vol. 5, no. 1, pp. 358-373, Jul. 2026.

MLA CITATION

Kasenge, Martin, Turyahebwa Abanis, Byamukama Mpora Eliab & Ssemaluulu Paul Mukasa. "Credit Risk Identification and Loan Portfolio Quality in Uganda's Commercial Banking Sector: The Moderating Effect of Adverse Selection". *International Journal of Finance and Accounting*, Vol. 5, no. 1, Jul. 2025, pp. 358-373, doi:10.37284/ijfa.5.1.5372

INTRODUCTION

The banking sector across the globe has for years been an indispensable financial service sector supporting development plans through extension of loans and advances to the public, mobilizing and controlling the flow of funds from surplus to deficit units, and supporting financial as well as economic policies of governments (Saunders & Cornett, 2008; Christopher, 2015; Mhadhbi, Terzi, & Bouchrika, 2017; International Monetary Fund, 2021). Accordingly, extending loans and advances to borrowers is ranked as the primary business of commercial banks across the globe, and as such, lending is the core source of income for banks through earnings of interest income by the credit multiplication process (Neven, 2020; Bayar & Gavriletea, 2021). This way, commercial banks exist to principally execute the credit creation function through the credit multiplier process while at the same time they undertake financial intermediation and ensure custody of funds (International Monetary Fund, 2021).

Most importantly, however, as the banking industry continues to expand, the performance of loan portfolios across the globe presents mixed results, improving in some geographical areas and declining elsewhere (International Monetary Fund, 2021; Bayar & Gavriletea, 2021). According to Neven (2020), whereas the global percentage of Non-Performing Loans (NPLs) to gross loans improved from 6.51% to 5.86% during the period 2018 - 2020, a critical analysis of region-specific statistics reveals stagnating performance. For example, Europe had its NPLs to gross loans stagnate between 7.87% and 7.11% from 2018 to 2020, while over the same period, the NPLs to gross of Africa stagnated between 11.67% and 8.92%, respectively. In Asia, the NPLs to gross loans shot up from 4.49% in 2018 to 10.09% by 2020, while North America achieved 3.93% and 4.27% over the same period. Additional statistics from Europe indicate that by 2021, about 35% of the new credit appeared exposed to default, prompting the banking sector's call for fiscal support measures for all corporations to which debt had been extended (Bayar & Gavriletea, 2021). Thus, according to the IMF, this issue remains a challenge across the banking sector, particularly in economies where NPL ratios as a percentage of gross loans are in double digits (International Monetary Fund, 2021).

To ensure sound lending operations in the sector, at a regulatory level, the Bank of Uganda has continuously designed and issued a number of guidelines that commercial banks have to adhere to while executing the lending function aimed at mitigating credit risk (Bank of Uganda, 2018; Bank of Uganda, 2024). Further still, the Ministry of Finance, Planning and Economic Development, through the Bank of Uganda, gave a license to *CompScan,* which is a South African-based firm, and to Metropol Uganda Limited to offer Credit Reference Bureau services to Uganda's regulated financial institutions. The objective was tracking instances of multiple borrowing and defaulters who would switch

 This work is licensed under a Creative Commons Attribution 4.0 International License.

Article DOI: https://doi.org/10.37284/ijfa.5.1.5372

between banks, and that such innovations would enable banks to only lend to those customers who are believed to pose less risk so as to ensure growth of a healthy and quality portfolio (Bank of Uganda, 2024). At an operational level, all financial institutions in Uganda have in place lending policy manuals that guide their lending activities with a view to identifying and managing credit risk. Further, the banks define and appraise a number of requirements such as purpose of the loan, repayment ability, borrowers' expenditure, employment history, collateral, guarantors, CRB inquiries, key stakeholder appraisal as well credit history appraisal among others with the aim of making the best loan decisions and hence propel prudent lending (Ndyagyenda, 2020; Bank of Uganda, Annual Supervisory Report, 2024).

Despite the developments leading to growth in loan activity and geographical coverage, Uganda's banking sector continues to trade with a growing volume of NPLs and an increasing risk of loan loss. Whereas the sector registered a growth in gross loans from 11.96trillion in 2018 to 16.4trillion in 2021, portfolio quality further deteriorated over the same period (Bank of Uganda, Annual Supervisory Report, 2018; Bank of Uganda, Annual Supervisory Report, 2024). Between 2018 and 2021 alone, non–performing loans grew from UGX 676.7 billion in 2018 to UGX 749.2 billion in 2019, then to UGX 1.032 trillion in 2020 and further increasing to UGX 1.17 trillion in 2021 (Bank of Uganda, Annual Supervisory Report, 2024). Accordingly, the specific loan loss provisions grew by almost 10% from 37.75% in 2020 to 47.18% in 2021. The country's banking sector has also, over the years, seen mergers, acquisitions, takeovers, as well as industrial exits due to the declining primary asset quality (Bank of Uganda, Annual Supervisory Report, 2024). Yet all this manifests amidst the continued execution of credit risk identification. The researchers were thus concerned as to whether the continuously deteriorating loan portfolio within commercial banks in Uganda is in any way pegged to the credit risk identification tactics employed, and hence the current study.

LITERATURE REVIEW

Credit Risk Identification and Loan Portfolio Quality in Uganda's Commercial Banks

A study by Kocenda (2021) concluded that credit risk identification plays a crucial role in improving loan portfolio quality by helping banks to identify risky loans as well as taking preventive measures to reduce the risk of loan defaults. A similar study by Kapoor and Khurana (2021) avers that the use of credit scoring models improves loan portfolio quality by increasing the accuracy of credit risk identification. To Azmi et al. (2021), loan portfolio quality positively associates with bank profitability, as banks with high-quality loan portfolios are more profitable than banks with low-quality loan portfolios. Other studies by Zainuddin and Rosepinoedji (2021) established that the quality of loan portfolios is negatively affected by macroeconomic factors such as GDP growth, inflation, and unemployment rates. On the other hand, Zhang and Feng (2022) examined the effect of credit risk identification on loan portfolio quality in Chinese commercial banks and established that a better credit risk identification system is associated with higher loan portfolio quality. Further still, Umar et al. (2021) aver that credit risk identification significantly and positively affects loan portfolio quality. Similar results were achieved by Noh & Lee (2021). Noh and Lee (2021) concluded that when the activities of risk identification are done effectively, they will have a positive effect on the quality of the loan portfolio.

The fact that these findings remain consistent across differing banking environments is vital in concretising the narrative that credit risk identification as a measure of credit risk management is a prime predictor of loan portfolio quality. However, the majority of the studies were guided by quantitative designs with extensive use of secondary data, building on econometric modelling. Thus, whereas the data choices were appropriate in facilitating the generation of statistical relationships among variables, little focus was given to qualitative results that

 This work is licensed under a Creative Commons Attribution 4.0 International License.

Article DOI: https://doi.org/10.37284/ijfa.5.1.5372

extensively examine the internal processes of an institution within which credit risk identification operates to inform loan portfolio quality. As a result, qualitative facts about the problem under investigation remain poorly articulated.

In a longitudinal study, Busra and Coskun (2021) desired to ascertain the predictors of personal financial behaviour linked to credit default to inform accurate and reliable credit risk assessment. The results indicated that demographic factors, especially level of income, experience, dependency burden, as well as frequency of earning, strongly and consistently predicted credit default and delinquency. Accordingly, results indicated that the focus in risk assessment techniques is shifting from the conventional methods to now include new and robust techniques, including the use of big data analytics to predict default and delinquency. Siddique et al. (2022) examined the effect of credit risk management alongside bank-specific factors on the financial performance of commercial banks in Asia and concluded that non-performing loans, Capital efficiency ratio, as well as liquidity ratio had a significant though negative association with financial performance through Return on assets and return on equity. However, findings indicate that capital adequacy ratio alongside average lending rate were positively and significantly associated with financial performance. However, whereas the employed methodologies are diverse and capable of scaling external validity regarding findings, comparison of findings becomes increasingly difficult. For example, a systematic review of literature lacks the ability to produce primary empirical evidence, while at the same time, such a method suffers from the quality of the literature engaged.

In their study, Bhatt et al. (2023) established that credit risk management had a positive and significant effect on both the quality of the loan portfolio and the overall performance of the loan book. Habamenshi and Gasana (2023) established similar results, although this study averred that risk identification was more instrumental in informing both performance and quality of the portfolio compared to credit risk monitoring and control. A similar study by Ntanzi (2022) established that credit risk management through risk identification and information sharing was positively associated with loan portfolio performance and directly and indirectly predicted the quality of the portfolio at a banking institution. Relatedly, Akugizibwe (2022) established that deficiencies in credit risk management, especially poorly identifying and profiling the various risks, had negative consequences on the overall quality of the loan portfolio and consequently affected portfolio performance. Therefore, the convergence of results from these studies is evidence that sound credit risk identification is paramount in lowering default rates and improving loan portfolio quality in financial institutions since effective screening of borrowers is consistent with improved lending decisions. However, by some studies looking at credit risk management as a single tenet and mapping it on loan portfolio quality, it becomes hard to isolate the contribution of credit risk identification in informing loan portfolio quality. Relatedly, the other studies happened in a microfinance sector where regulatory requirements for credit risk are sharply different, while at the same time, commercial bank clients have great differences in characteristics as compared to their counterparts in microfinance. This difference in context greatly affects the ability of the findings to generalise to the commercial banking sector.

Literature Gap

Conclusively, whereas the studies engaged consistently show robust empirical evidence that credit risk identification significantly predicts loan portfolio quality, key gaps remain methodologically, contextually and conceptually. The identified studies suffer methodological inadequacies as the majority relied on correlational designs. Whereas such designs are adequate in mapping statistical associations between variables, they remain inadequate in examining the causal relationships between the variables under review. Equally, only a handful of

 This work is licensed under a Creative Commons Attribution 4.0 International License.

Article DOI: https://doi.org/10.37284/ijfa.5.1.5372

studies reviewed exhibit integration of control factors such as inflation, exchange rate volatility, economic growth and interest rates that might affect the direct relationship between credit risk identification and loan portfolio Quality. Therefore, aware of the gaps in literature, the methodological inconsistencies, and the fact that most studies review fail to pay attention to the commercial banking sector in Uganda, the current study attempts to address the gaps by examining the effect of credit risk identification and profiling on loan portfolio quality in Uganda's commercial banking sector.

METHODOLOGY

Research Philosophy, Approach and Design

Given the nature and objectives of the proposed inquiry, the study was based on the pragmatic research philosophy, which holds that ontology, epistemology, as well as axiology can be described and hence determined by the nature of the problem at hand, as the research questions to which answers are sought (Saunders et al ., 2016). A pragmatic research philosophy was adopted because it offers the researcher an opportunity to use multiple methods, such as quantitative and qualitative methods, which in turn optimises the strengths of such methods (Cresswell & Vicki, 2011). Practically, blending quantitative methods with qualitative methods maximised the generalizability of results on one hand and permitted an in–depth analysis of the phenomenon under investigation on the other hand. Consequently, the weakness of the participants' voice lacking from the study as a result of quantitative studies was minimised, while at the same lack of generalizability that comes out of qualitative methods was averted (Cresswell, 2013). Relatedly, the study utilised a cross–sectional research design. A cross-sectional design was used to obtain primary data on bank staff who interact with credit risk. In the study, a cross–sectional design permitted the researcher the ability to collect primary data from the respective commercial bank staff who interact directly with credit risk at a single point in time in a faster yet inexpensive manner (Setia, 2016).

Study Population and Sample Size

The study population comprised commercial banks in Uganda under the license of the Bank of Uganda, which formed the units of analysis, and as such, the results of the study are generalised to this sector. Currently, Uganda has 24 commercial banks fully licensed by the Bank of Uganda (Bank of Uganda, 2024), of which 14 banks had an average NPL ratio above 5% for the period 2020 - 2024, and these defined the target population. Further scrutiny indicated that 50% (7) of the commercial banks with high NPLs had PAR above 7% for the last five (5) years, which stood above 5% - the maximum risk permitted by the sector regulator to ensure a sound banking system. Consequently, the researcher settled for the seven (7) banks with an average NPL ratio above 7% for the last 5 years, which formed the target population. From the 7 banks, the researcher sought primary data from staff of the credit department, Operations department, risk management department, compliance department, finance, internal audit, legal department, ICT (Business Technology), Treasury, Procurement, marketing & Communication, as well as the Human Resource Management department, as these are the departments directly and indirectly associated with credit risk in a banking institution. Accordingly, members of staff from these departments formed the units of inquiry for the study. In particular, by taking (5) participants from each of the earmarked departments, the resultant population was 420 (5*12*7) members of staff in departments associated with credit risk, which formed the effective population. Accordingly, the Managing Directors or their designees at each of the seven (7) banks formed the population of interview participants to enable the researcher to collect primary qualitative data. In the end, the effective population for the study was 427 members who were staff from departments associated with credit risk as well as the CEOs of the banks in question (Krejecie & Morgan, 1970). Therefore, given a population of

 This work is licensed under a Creative Commons Attribution 4.0 International License.

Article DOI: https://doi.org/10.37284/ijfa.5.1.5372

427 participants, a sample size of 207 participants was chosen to participate in answering questionnaires and interviews (Krejecie & Morgan, 1970).

Data Collection Instruments

To achieve the objectives of the study, structured self-administered questionnaires (SAQs) and an interview guide were used in collecting data from the defined sample size. The researcher adopted structured self-administered questionnaires to collect primary quantitative data from the sample (Taherdoost, 2021). A self- administered questionnaire is preferred because it has the ability to collect large volumes of data from larger samples in a short time and at relatively lower costs (Jotform, 2019; Trung & Khuc, 2021). During the execution of the data collection activity, the questionnaires were administered to staff from all departments associated with credit risk and the loan portfolio to ensure that the desired facts are captured from the most suitable participants. In a related development, the researcher adopted an interview to collect primary qualitative data from senior management at the respective commercial banks constituting the study. The researcher conducted interviews with the Managing Directors of the banks under study to gather a more consolidated position regarding the overall quality of the loan portfolio. Interviews were conducted to get rich and detailed facts about the dynamics surrounding credit risks as well as how such risks interact with the quality of the loan portfolio. According to Sekaran and Bougie (2013), interviews provide an in-depth understanding of the phenomenon under study and help in addressing the key facts eluded by quantitative data. Further still, data collected through interviews digs beyond the numerical aspects of a phenomenon under inquiry and helps in drawing comprehensive conclusions (Taherdoost, 2021).

Data Quality Control

The study executed quality control tests prior to the data collection exercise to assess the ability of the tools to generate appropriate and consistent findings in line with the study objectives. In particular, the validity of the data tools was achieved through expert review of the items suggested in the data tools. After industrial experts rated the appropriateness of the data tools, the content validity index (CVI) of the tools was processed as 0.847. This stood above the recommended 0.7 index for a tool to be valid, and hence the tools were accepted as valid to permit a reliability test (Amin, 2005; Sekaran & Bougie, 2013). Relatedly, the study performed factor analysis using sample data, achieving adequate (acceptable) loadings for each construct. To test for reliability, sample questionnaires were piloted at 3(three) commercial banks, after which the Cronbach alpha index and as well as composite reliability. Upon processing of the sample data collected, both Cronbach alpha and composite reliability indices stood above 0.7 – the recommended minimum index for a tool to qualify as reliable (Amin, 2005; Sekaran & Bougie, 2013). Consequently, the study deployed the tools for data collection.

Ethical Considerations

To uphold the ethical requirements, the study received authorisation from the respective entities. Specifically, the data collection process only commenced upon the study satisfying the rigorous process from concept development to obtaining clearance from the Research and Ethics Committee of Kabale University. Resultantly, the study obtained a research permit from the Uganda National Council for Science and Technology (UNCST) to collect the desired data. This was accompanied by authorisation from the bank authorities at the respective banks, which granted the study access to collect data.

Data Analysis and Integration of Findings

To analyse the data, the researcher undertook univariate-level techniques, bivariate-level techniques, as well as multivariate-level analysis techniques as elucidated hereunder. At the univariate level of analysis, the researcher

 This work is licensed under a Creative Commons Attribution 4.0 International License.

Article DOI: https://doi.org/10.37284/ijfa.5.1.5372

employed means and standard deviations to describe the opinions and views of study respondents on all the variables upon which the study is constructed. At a bivariate level, correlation statistics were run to help in describing the relationships between the study variables, while at a multivariate level, Structural Equation Modelling (SEM) via the Statistical Package for Social Scientists (SPSS) Version 25 and Jaffrey's Amazing Statistical Package (JASP) version 0.19.30 was performed for establishing the predictability of Loan Portfolio Quality from Credit Risk Identification. With the interrelationships and effects established, the researcher ran the Hierarchical Moderated Multiple Regression (HMMR) to examine the moderating effect of adverse selection on both Credit Risk Identification and Loan Portfolio Quality at the respective commercial banks under study.

RESULTS AND DISCUSSION

Exploratory Factor Analysis (EFA)

Exploratory Factor Analysis (EFA) was conducted to examine the underlying structure of the measurement items used in this study, reduce the large number of observed variables into a smaller set of interpretable factors (data reduction), explore the relationships among variables, and prepare the measurement model for Confirmatory Factor Analysis (CFA). EFA is a multivariate statistical technique used to identify latent constructs that explain patterns of correlations among observed variables (Hair et al., 2019). EFA is particularly appropriate in studies where measurement scales are adapted or applied within new contextual environments, such as Uganda's commercial banking sector. Before performing factor extraction, it is necessary to determine whether the dataset is appropriate for EFA. This involves evaluating sample adequacy and the strength of intercorrelations among variables. In this study, the Kaiser-Meyer-Olkin (KMO) Measure of Sampling Adequacy Test and Bartlett's Test of Sphericity were used to assess the suitability of the data for EFA.

Table 1: Factor Loadings, Validity and Reliability Coefficients for the Study Variables

Item retained	Factor loading	Factor formed	KMO and Bartlett's test		Cronbach's alpha	Average variance extracted	Composite Reliability
			KMO	Sig. Bartlett's			
RI4	0.866						
RI10	0.833						
RI1	0.767						
RI3	0.722						
RI6	0.677	RS1		< 0.001	0.877	0.563	0.884
RI2	0.604						
RI7	0.882						
RI9	0.703						
RI5	0.670	RS2	0.823	< 0.001	0.785	0.509	0.802
RI8	0.562						
AS10	0.812						
AS7	0.769						
AS2	0.728	ADS1		< 0.001	0.810	0.593	0.814
AS1	0.908						
AS6	0.751						
AS9	0.704	ADS2		< 0.001	0.828	0.628	0.834
AS5	0.839						

 This work is licensed under a Creative Commons Attribution 4.0 International License.

Article DOI: https://doi.org/10.37284/ijfa.5.1.5372

Item retained	Factor loading	Factor formed	KMO and Bartlett's test		Cronbach's alpha	Average variance extracted	Composite Reliability
			KMO	Sig. Bartlett's			
AS4	0.571						
AS3	0.501	ADS3	0.796	< 0.001	0.647	0.427	0.680
LPQ9	0.935						
LPQ3	0.829						
LPQ2	0.795						
LPQ8	0.793						
LPQ1	0.665	PQ1		< 0.001	0.850	0.653	0.903
LPQ5	0.925						
LPQ6	0.740		0.824				
LPQ4	0.582	PQ2		< 0.001	0.758	0.481	0.775
LPQ10	0.426						

Source: *Field Data (2025)*

Results in Table 1 indicate that the Kaiser–Meyer–Olkin (KMO) Measure of Sampling Adequacy was 0.823. This KMO value for Credit Risk Identification exceeds the recommended minimum threshold of 0.50, indicating that the sample was adequate for factor analysis. The KMO value indicates acceptable sampling adequacy and suggests that the items of Credit Risk Identification and Profiling share sufficient common variance, with compact correlation patterns suitable for extracting reliable factors. Similarly, Bartlett's Test of Sphericity was statistically significant ($p < 0.001$), indicating that the correlation matrix was not an identity matrix. This confirms the existence of significant relationships among the items of Credit risk identification and profiling and justifies proceeding with factor extraction (Field, 2018). Based on both the significant Bartlett's Test of Sphericity and the KMO value of 0.823, which is greater than 0.5, these results collectively confirm that the data were appropriate for factor analysis.

The KMO value for the adverse selection construct was 0.796, which exceeds the recommended minimum threshold of 0.50. This result indicates an acceptable level of sampling adequacy and suggests that the adverse selection items share sufficient common variance to warrant factor analysis. Bartlett's Test of Sphericity was statistically significant ($p < 0.001$), confirming that the correlation matrix was not an identity matrix and that meaningful relationships exist among the variables (Field, 2018). Taken together, these results justify proceeding with factor extraction in the adverse selection data.

Further still, data on Loan portfolio quality were found to be suitable for factor analysis and hence to move on to EFA since its value of KMO=0.824 was greater than 0.5 and its Bartlett's Test of Sphericity was statistically significant ($p < 0.001$), indicating that the correlation matrix was not an identity matrix. This implied that the variables were significantly correlated with one another, satisfying a key assumption for factor extraction. Therefore, the items measuring Loan portfolio quality were considered suitable for factor extraction.

 This work is licensed under a Creative Commons Attribution 4.0 International License.

Article DOI: https://doi.org/10.37284/ijfa.5.1.5372

Test for Goodness of Fit

Table 2: Fit Indices and Validity Measurements

Variable	Fit indices				Validity & Reliability	
	SRMR	RMSEA	TLI	CFI	AVE	McDonald's omega (ω)
CRI	3.323×10^{-8}	0.000	1.000	1.000	0.664	0.798
ADS	0.041	0.050	0.904	0.926	0.536	0.964
LPQ	1.968×10^{-9}	0.000	1.000	1.000	0.589	0.741

Source: *Primary Data (2025)*

From Table 2, it is revealed that the confirmatory factor analysis produced perfect model fit indices (CFI = 1.000, TLI = 1.000, RMSEA = 0.000) for latent constructs CRI and LPQ. While these values suggest excellent model fit, they should be interpreted with caution. The measurement models for CRI and LPQ were measured using only two indicators, which results in a just-identified (saturated) or nearly just-identified model. In such cases, global fit indices may become inflated or non-informative because the model is able to reproduce the observed covariance matrix almost perfectly. For such models, it is suggested that greater emphasis should be placed on the assessment of reliability and validity measures rather than global fit indices in evaluating the adequacy of the measurement model (Kline, 2016; Byrne, 2016; Hair et al., 2019).

Despite this limitation, the measurement models for two-indicator constructs CRI and LPQ were retained based on strong empirical support from the indicator reliability and validity measures. All their factor loadings exceeded the recommended threshold of 0.70, suggesting strong relationships between the indicators and their respective latent constructs. In addition, Omega values were above the acceptable threshold of 0.70, confirming internal consistency, while Average Variance Extracted (AVE) values exceeded 0.50, indicating satisfactory convergent validity (Fornell et al., 1981; Kline, 2016; Hair et al., 2019). Furthermore, the use of two-indicator constructs is considered acceptable in structural equation modelling when supported by strong theoretical justification and high factor loadings, particularly in applied research contexts (Kline, 2016; Byrne, 2016; Hair et al., 2019). Therefore, the retained constructs CRI and LPQ are deemed to adequately represent their underlying latent variables. For ADS, fit indices were used in evaluating its measurement model since it was not just identified. Figures 1(a), 1(b), and 1(c) present the measurement models for latent variables CRI, ADS, and LPQ, respectively.

Figure 1 (a): Measurement Model for Credit Risk Identification and Profiling

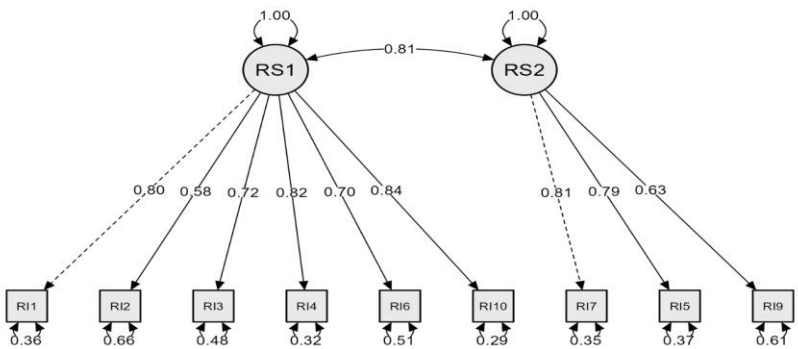

 This work is licensed under a Creative Commons Attribution 4.0 International License.

Article DOI: https://doi.org/10.37284/ijfa.5.1.5372

Figure 1(a) revealed that indicators RS1 and RS2 loaded strongly on the CRI construct, with factor loadings of 0.71 and 0.96, respectively, exceeding the recommended threshold of 0.70, suggesting that the indicators are good representations of the latent construct (CRI). The high loadings indicate that a high proportion of the variance in the observed variables RS1and RS2 is explained by CRI, supporting convergent validity and indicating good indicator reliability.

Figure 1(b): Measurement Model for Adverse Selection

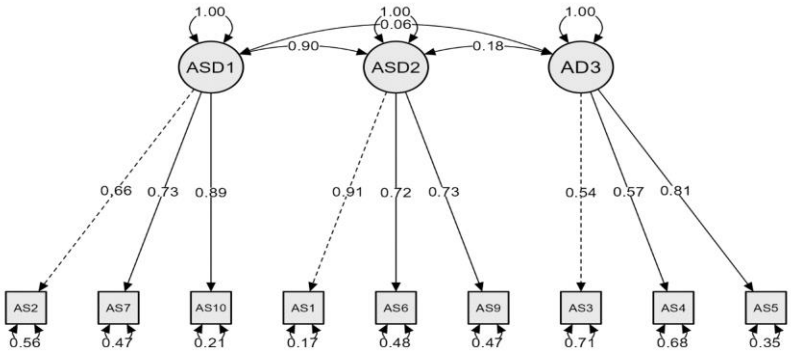

From Figure 1(c), indicators (AS2, AS7 and AS10) loaded strongly on ADS1 while (AS1, AS6 and AS7) loaded strongly on and ADS2. Accordingly, (AS3, AS4 and AS5) loaded strongly onto ADS3 as seen from their path coefficients of 0.89, 0.76 and 0.51, respectively. This indicated a strong relationship between the latent construct adverse selection and the observed variables ADS1, ADS2 and ADS3. The high loadings indicate that a substantial proportion of the variance in the indicators ADS1, ADS2 and ADS3 is explained by the latent construct (ADS), thereby supporting convergent validity and indicating good indicator reliability.

Figure 1 (c): Measurement Model for Loan Portfolio Quality

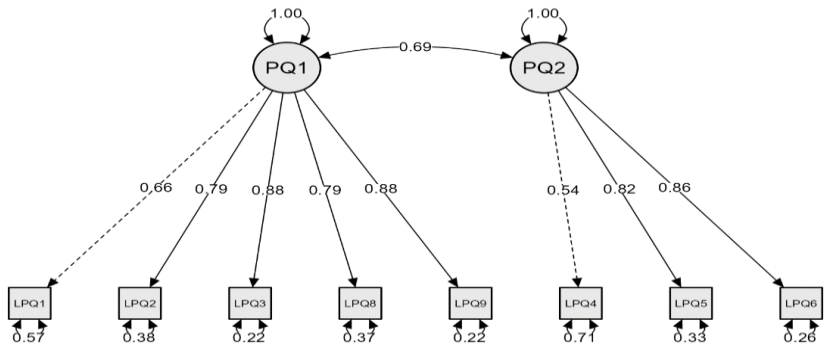

During the evaluation of the measurement model for loan portfolio quality (LPQ), greater emphasis was placed on the assessment of reliability and validity measures rather than global fit indices in evaluating the adequacy of the measurement model since the model was saturated or nearly saturated. Observable variables PQ1 and PQ2 loaded strongly onto LPQ, as indicated by their factor loadings (path coefficients) of 0.76 and 0.78, respectively (see Figure 1(c)). This suggests that the indicators PQ1 and PQ2 are good representations of the latent construct (LPQ). The high loadings indicate that a substantial proportion of the variance in these indicators is explained by the latent construct (LPQ), thereby

 This work is licensed under a Creative Commons Attribution 4.0 International License.

Article DOI: https://doi.org/10.37284/ijfa.5.1.5372

supporting convergent validity and indicating good indicator reliability.

Hypothesis Testing for the Direct Effect

Finally, the significance of the effect of Credit Risk Identification and Profiling on loan portfolio quality was analysed in order to assess the direct research hypothesis. This involved examining the estimated coefficient and its corresponding p-value to determine whether the independent construct had a statistically significant influence on loan portfolio quality (Kline, 2016).

The specified structural model to examine the direct effect of credit risk identification and profiling on loan portfolio quality is as expressed in Equation 1.1.

$$LPQ = \beta_1 CRI + \varepsilon \quad (1.1)$$

Where LPQ, CRI are respectively loan portfolio quality and credit risk identification and profiling, while β_1 is the regression coefficient, and ε is the error term. The regression output is presented in Table 3.

Table 3: Path Coefficients for the Direct Hypothesised Relationships within the SEM Model

						95% Confidence interval	
Outcome	**Predictor**	**Std. estimate**	**Std. Error**	**z-value**	**p**	**Lower**	**Upper**
LPQ	CRI	0.271	.203	0.898	0.002	-0.678	2.440

Source: *Primary Data (2025)*

From Table 3, the hypothesis H_{01} was tested:

H_{01}: Risk identification and profiling significantly affect loan portfolio quality in commercial Banks in Uganda.

From Table 3, the coefficient of Credit Risk Identification (CRI) of 0.271 shows that Credit Risk Identification has a positive effect on loan portfolio quality, which is statistically significant (p-value=0.002 < 0.05). This implies that improvements in credit risk identification are associated with improvements in loan portfolio quality and that the effect is statistically significant. Therefore, we accept H_{o1} and conclude that Credit Risk identification and profiling significantly affect loan portfolio quality in Commercial Banks in Uganda.

Hypothesis Testing for the Indirect Effects

Since the study adopted Adverse Selection (ADS) as a moderating variable, the researcher went on to test its effect on both Credit Risk Identification (CRI) and Loan Portfolio Quality (LPQ), aimed at examining whether adverse selection could be one of the conditional mechanisms predicting LPQ. Therefore, the moderating effect of **adverse selection** on both CRI and LPQ was examined using hierarchical moderated regression analysis.

H_{02}: Adverse selection does not significantly moderate the relationship between Credit risk Identification and loan portfolio quality in Commercial Banks in Uganda.

The moderation effect was tested using hierarchical moderated multiple regression (HMMR), where predictor variables (CRI), moderator variable (ADS), and interaction terms were entered sequentially into the regression model. The regression analysis was performed in three main steps. First, the moderator variable (Adverse Selection) was entered into the model. Second, the independent variable was introduced alongside the moderator. Finally, the interaction term was included to test the moderating effect. This approach is widely recommended for testing interaction effects in social science research (Aiken & West, 1991; Cohen et al., 2003; Hayes, 2018).

 This work is licensed under a Creative Commons Attribution 4.0 International License.

Article DOI: https://doi.org/10.37284/ijfa.5.1.5372

The equation of the moderated model (full model), M_3 is as presented in Equation 1.2.

$$LPQ = \gamma_0 + \gamma_1 ADS + \gamma_2 CRI + \gamma_3 (CRI \times ADS) + \varepsilon \quad (1.2)$$

Where LPQ, $CRI, ADS,$ and $CRI \times ADS$ are, respectively, loan portfolio quality, credit risk identification and profiling, adverse selection, and the interaction term between credit risk identification and profiling and adverse selection; $\gamma_0, \gamma_1, \gamma_2,$ and γ_3 are the regression coefficients corresponding to LPQ, $CRI, ADS,$ and $CRI \times ADS$ respectively; and ε is the error term.

Table 3 presents the full moderated regression model including adverse selection (ADS), credit risk identification and profiling (CRI), and their interaction term (CRI × ADS). The results show that both CRI (coefficient γ = 0.271, p < 0.001) and ADS (coefficient =0.670, p < 0.001) have positive and statistically significant effects on loan portfolio quality. Importantly, the interaction term (CRI × ADS) is negative and statistically significant (Coefficient $\gamma = -0.353, \mathrm{p} = 0.001$), indicating that the adverse effect moderates the relationship between CRI and LPQ. *Hence, we reject H_{O2} and conclude that adverse selection significantly moderates the relationship between CRI and loan portfolio quality.*

The negative interaction coefficient suggests that the positive effect of credit risk identification and profiling on loan portfolio quality decreases as adverse selection increases. In addition, it should be noted that the SEM results indicated that CRI had a statistically significant direct effect on loan portfolio quality ($\beta = .493, p = 0.002$). The moderation analysis results confirm that the effect of credit risk identification and profiling practices on loan portfolio quality is direct, but falls with increasing levels of adverse selection. In other words, the effectiveness of credit risk identification and profiling practices in improving loan portfolio quality depends on the extent of adverse selection present in the lending environment.

Table 4: Moderating Effect of ADS on Both CRI and LPQ

							95% CI	
Model		**Unstandardized**	**Standard Error**	**Standardized**	**t**	**p**	**Lower**	**Upper**
M₃	(Intercept)	-0.509	0.371		-1.372	0.172	-1.241	0.223
	ADSav	1.066	0.135	0.670	7.870	< .001	0.798	1.333
	CRIav	0.593	0.138	0.271	4.290	< .001	0.320	0.866
	CRIavADSav	-0.125	0.038	-0.353	-3.309	0.001	-0.199	-0.050

DISCUSSION OF RESULTS

The coefficient of Credit Risk Identification (CRI) of 0.271 shows that Credit Risk Identification has a positive effect on loan portfolio quality and that the effect is statistically significant (p-value=0.002 <0.05). This implies that improvements in credit risk identification are associated with improvements in loan portfolio quality and that the effect is statistically significant. Therefore, we accept H_{o1} and conclude that Credit Risk identification and profiling significantly affect loan portfolio quality in Commercial Banks in Uganda. The findings technically imply that there exists a congruence between conventional techniques of identifying and profiling risks and the actual causes of nonperforming loans in the contemporary lending environment. As a result, when risk identification and profiling contribute to offering protection to the bank's loan portfolio, banks ought to focus on conventional tactics employed to profile the risks associated with various borrower segments during the preamble to making a lending decision.

The results are consistent with the earlier positions from previous scholars, as their findings point to the existence of a significant association between risk identification and loan portfolio quality. For example, Mutatenyi and Clement

 This work is licensed under a Creative Commons Attribution 4.0 International License.

Article DOI: https://doi.org/10.37284/ijfa.5.1.5372

(2022) established that loan portfolio quality largely depended on a commercial bank hinged on the extent of its credit risk management practices through risk identification, assessment, as well as monitoring and control of the various risks presented. This could probably imply that credit risk management practices hinge on the risk identification activities as the primary practice in an attempt to manage risk positively and improve loan portfolio quality. In the same perspective, Zhang and Feng (2022) concur with the former position, holding that a better credit risk identification system is associated with higher loan portfolio quality. Similar results were achieved by Umar et al. (2021) averring that credit risk identification significantly and positively affects loan portfolio quality. These results imply that effective credit risk identification and profiling by the commercial banks makes it possible to minimise default risk at the onset of the loan cycle by guiding the bank to stick to the credit policies and focusing on exhausting borrower qualitative characteristics that would guide a loan decision. Therefore, through proper identification of the various credit risks, information asymmetry is reduced while at the same time the next stage in credit risk management (risk assessment) is pre-empted, alongside guiding the collateral choices that the bank can define for a loan applicant to shield against the risk of default.

Relatedly, Akugizibwe (2022) concurs with the former submission, averring that deficiencies in credit risk management, especially poorly identifying and profiling the various risks, had negative consequences on the overall quality of the loan portfolio and consequently affected portfolio performance. Similarly, Ntanzi (2022) concluded that risk identification and information sharing is positively associated with loan portfolio performance and directly and indirectly predict the quality of the portfolio at commercial banking institutions. This implies that identifying and profiling risks alone without ironing out any forms of impurities and gaps in the entire risk management framework, coupled with compromised integrity of the credit staff and inadequacies in segregation of duties during the process of granting a loan, worsens the quality of the loan portfolio.

The results, however, disagree with Semusu et al. (2026), who submitted that risk identification and credit limits determination, although positive, were insignificant in predicting the quality of the loan portfolio and overall performance of the loan book. Other opinion results were achieved by Busra and Coskun (2021), who submitted that the focus in risk identification and assessment techniques is shifting from the conventional methods to now include new and robust techniques, including the use of big data analytics to predict default and delinquency. This therefore implies that while identification and profiling of the augmented credit risks was found to be present in the respective commercial banks studied, a host of laxities in implementing sound risk management frameworks increased default risk and worsened the quality of the loan portfolio. Relatedly, intrigue and collusion between bank officials and the borrowers, as well as excessive pressures from the environment, both internal and external, limited the risk identification framework's ability to deliver the intended objectives.

Regarding the impact of the moderating variable, the results are consistent with Pomeranz and Stucchi (2021), who concluded that adverse selection negatively affects credit risk management practices and loan performance and that randomised credit checks can be an effective tool for mitigating adverse selection. The position was established by Okoth and Achoki (2021) concluded that adverse selection is a significant predictor of credit risk, and that certain loan characteristics, such as loan size and loan terms, can mitigate the adverse effects of adverse selection. Results are also in agreement with Kiganda and Muburi (2020), who submitted that adverse selection has a significant negative effect on loan portfolio quality in financial institutions. Results thus suggest that financial institutions, especially those in emerging markets, should consider implementing measures to mitigate

 This work is licensed under a Creative Commons Attribution 4.0 International License.

Article DOI: https://doi.org/10.37284/ijfa.5.1.5372

adverse selection risk, such as randomised credit checks, reviewing qualitative attributes of borrowers, and ensuring regulatory compliance while respecting credit policies in order to improve loan portfolio quality and financial performance. Drawing from the results, financial institutions should consider offering more flexible loan terms and increasing access to credit while remaining alert to the possibilities of information manipulation by borrowers. This can be done through retooling credit staff in order to mitigate the effects of adverse selection and financial constraints.

CONCLUSIONS

The study concludes that credit risk identification is a critical determinant of loan portfolio quality in commercial banks. The positive and statistically significant relationship demonstrates that banks that effectively identify potential credit risks at the pre-lending stage have a higher chance of minimising loan defaults, reducing non-performing loans, and maintaining healthier loan portfolios. This finding underscores the strategic importance of robust borrower screening, comprehensive due diligence, and accurate risk profiling as the foundation of prudent credit risk management. Similarly, the study adverse selection significantly moderates the effect of credit risk identification on loan portfolio quality in Uganda's commercial banking sector, and that the positive contribution of credit risk identification to loan portfolio quality reduces as adverse selection increases.

Recommendation

The study recommends that commercial banks strengthen their credit risk identification practices by adopting comprehensive borrower screening, rigorous due diligence, robust credit scoring models, and data-driven risk assessment systems to improve loan portfolio quality. Given the significant moderating effect of adverse selection, banks should also implement measures that reduce information asymmetry through enhanced use of Credit Reference Bureaus, effective Know Your Customer (KYC) procedures, information-sharing mechanisms, and alternative credit data to accurately identify high-risk borrowers. In addition, continuous training of credit staff and investment in advanced digital technologies, such as predictive analytics and artificial intelligence, will enhance the effectiveness of credit risk identification. The Bank of Uganda should further strengthen regulatory frameworks that promote information sharing and prudent credit appraisal standards across the banking sector. Collectively, these measures will enhance lending decisions, reduce non-performing loans, and improve the overall quality and sustainability of commercial banks' loan portfolios.

Acknowledgements

Great thanks go to the various commercial banks and the staff at large for sparing time to participate in the study.

REFERENCES

Akugizibwe, J. (2022). *Analysis of loan repayment in Uganda's Commercial Banks: A Case of Home Loans and Overdraft Facilities at Stanbic Bank Uganda.* Kampala: Makerere University. Retrieved July 18, 2025

Amin, M. E. (2005). *Social Sciences Research: Conception, Methodology and Analysis.* Kampala: Makerere University Printery.

Azmi, W. N., Masih, M., & Ahmed, R. (2021). Loan Portfolio Quality and Bank Profitability: Evidence from Malaysia. *Journal of Asian Finance, Economics and Business, 8*(1), 199 - 207.

Bank of Uganda. (2018). *Annual Supervisory Report.* Kampala: Bank of Uganda.

Bank of Uganda. (2024). *Annual Supervisory Report.* Kampala: Bank of Uganda.

 This work is licensed under a Creative Commons Attribution 4.0 International License.

Article DOI: https://doi.org/10.37284/ijfa.5.1.5372

Bank of Uganda. (2024, June 30). LICENSED COMMERCIAL BANKS. Kampala, Central Region, Uganda.

Bayar, B. Y., & Gavriletea, M. D. (2021). Banking Sector Stability and Economic Growth in Post transition European Union Countries. *International Journal of Finance and Economics, 26*(1), 949 - 961.

Bhatt, T. K., Ahmed, N., Iqbal, M. B., & Ullah, M. (2023). Examining the determinants of Credit Risk management and their relationship with the performance of commercial banks in Nepal. *Journal of Risk and Financial Management, 16*(4), 235.

Busra, A. C., & Coskun, E. (2021). A longitudinal Systematic Review of Credit Risk Assessment and Credit Default Predictors. *SAGE Open Journal*, 1 - 19.

Christopher, C. (2015). *The past, present and future of banking history.* Belfast: Queen's University Centre for Economic History (QUCEH), Queen's University Belfast.

Claydon, S. L. (2015). Rigour in Quantitative Research. *Nursing Standard, 29*(47), 43 - 48.

Cresswell, J. W. (2013). *Qualitative Inquiry and Research Design: Choosing Among the Five Approaches* (3rd Edition ed.). Thousand Oaks: Sage.

Cresswell, J. W., & Vicki, L. P. (2011). *Designing and Conducting Mixed Research Methods Research* (2nd Edition ed.). Thousand Oaks: Sage.

Habamenshi, V., & Gasana, D. S. (2023). Effect of Credit Risk Management on Loan Performance among Microfinance Institutions in Rwanda. *African Journal of Banking and Finance, 4*(2), 11-19.

International Monetary Fund. (2021). *Global Financial Stability Report - COVID 19, Crypto and Climate: Navigating Challenges and Transitions.* Washington, DC: IMF Creative Publications Division.

Jotform. (2019, September 27). *Data Collection Methods*. Retrieved April 24, 2022, from jotform.com: www.joform.com/data-collection-methods

Kapoor, R., & Khurana, M. (2021). Impact of Credit Scoring on Loan Portfolio Quality: Evidence from Indian Banks. *Journal of Asia Business Studies, 15*(1), 113 - 126.

Kasozi, N. N., & Ndagire, F. (2020). The effect of Adverse selection on credit risk management practices and loan portfolio quality in microfinance institutions in Uganda. *Journal of Financial Services Marketing, 25*(3), 85 - 98.

Kiganda, M. E., & Muburi, T. K. (2020). Adverse Selection, Credit Risk Management Practices and Loan Portfolio Quality of Microfinance Institutions in Kenya. *International Journal of Development and Sustainability, 9*(5), 141 - 154.

Kocenda, E. (2021). Credit Risk Identification and Loan Portfolio Quality: Evidence from European Banks. *Journal of Financial Sustainability, 54*, 100896.

Krejecie, R. V., & Morgan, D. W. (1970). Determining Sample Size for Research Activities. *Educational and Psychological Measurement, 38*, 607 - 610.

Mhadhbi, K., Terzi, C., & Bouchrika, A. A. (2017). Banking Sector Development and Economic Development in Developing Countries: A Bootsrap Panel Granger Causality Analysis. *International Journal of Economics and Finance, 4*(5), 105 - 117.

Mutatenyi, T. S., & Clement, O. O. (2022). Assessment of Loan Portfolio Quality on Financial Performance of Commercial Banks

 This work is licensed under a Creative Commons Attribution 4.0 International License.

Article DOI: https://doi.org/10.37284/ijfa.5.1.5372

in Kenya. *Journal of Economics Business and Accounting, 3*(4), 21-33.

Ndyagyenda, C. (2020). Credit Risk Management and Financial Performance of Commercial Banks, a Case of Bank of Africa Uganda. *Open Journal of Business and Management*, 30 - 30.

Neven, V. (2020, June Wednsday 10). *The Global Economy*. Retrieved June Friday 24, 2022, from www.theglobaleconomy.com/rankings/ non - performining loans: http://theglobaleconomy.com.

Noh, M. Y., & Lee, Y. (2021). The Effect of Credit Risk Identification on Loan Portfolio Quality in Korean Banks. *Sustainability, 13*(21), 11848.

Ntanzi, H. J. (2022). *Credit Risk Management, Credit Information Sharing and Portfolio Performance among Commercial Banks in Uganda. A case of Bank of Africa Uganda.* Kampala: Makerere University. Retrieved July 16, 2025

Okoth, E. O., & Achoki, G. (2020). Adverse Selection, Loan Characteristics and Credit Risk of SMEs in Kenya. *Journal of African Business, 21*(3), 324 - 346.

Pomeranz, F., & Stucchi, R. (2021). Adverse Selection and Credit Risk Management: Evidence from Randomized Credit Checks in Chile. *The Quarterly Journal of Economics, 136*(1), 417 - 466.

Saunders, A., & Cornett, M. M. (2008). *Financial Institutions Management.* New York: McGraw Hill/Irwin.

Saunders, M., Lewis, P., & Thornhill, A. (2016). Research methods for business students. Harlow: Pearson.

Sekaran, U., & Bougie, R. (2013). *Research Methods for Business: A skill - building approach.* (6th Edition. ed.). Chichester: John Wiley and Sons Ltd.

Semusu, A., Eton, M., Kaaya, S., & Byamukama, E. M. (2026). The Effect of Credit Limit Policies on Loan Performance in the Banking Sector of the Central Region - Uganda. *East African Journal of Business and Economics, 9*(1), 194-206.

Setia, M. S. (2016). Methodology Series Module 3:Cross - Sectional Studies. *Indian Journal of Dermatology, 61*, 261 - 264.

Taherdoost, H. (2021). Data Collection Methods and Tools for Research: A Step - by - Step Guide to Choose Data Collection Techniques for Academic and Business Research Projects. *International Journal of Academic Research and Management (IJARM), 10*(1), 10 - 38.

Trung, T., & Khuc, Q. (2021). *Primary Data.* Hanoi, Vietnam: Vietkap group.

Umar, A. H., Ismail, N. W., & Abdullahi, Y. (2021). Credit Risk Identification and Loan Portfolio Quality: Evidence from the Islamic Banks in Nigeria. *International Journal of Islamic and Middle Eastern Finance and Management, 14*(3), 452 - 471.

Zainuddin, Z., & Rosepinoedji, D. S. (2021). The effect if macroeconomic variables on loan portfolio quality in Indonesian Banking Industry. *Bulletin of Monetary Economics and Banking, 23*(1), 39 - 58.

Zhang, X., & Feng, G. (2022). The effect of credit identification on loan portfolio quality: Evidence from Chinese Commercial Banks. *Pacific - Basin Finance Journal, 69*, 101843.

 This work is licensed under a Creative Commons Attribution 4.0 International License.